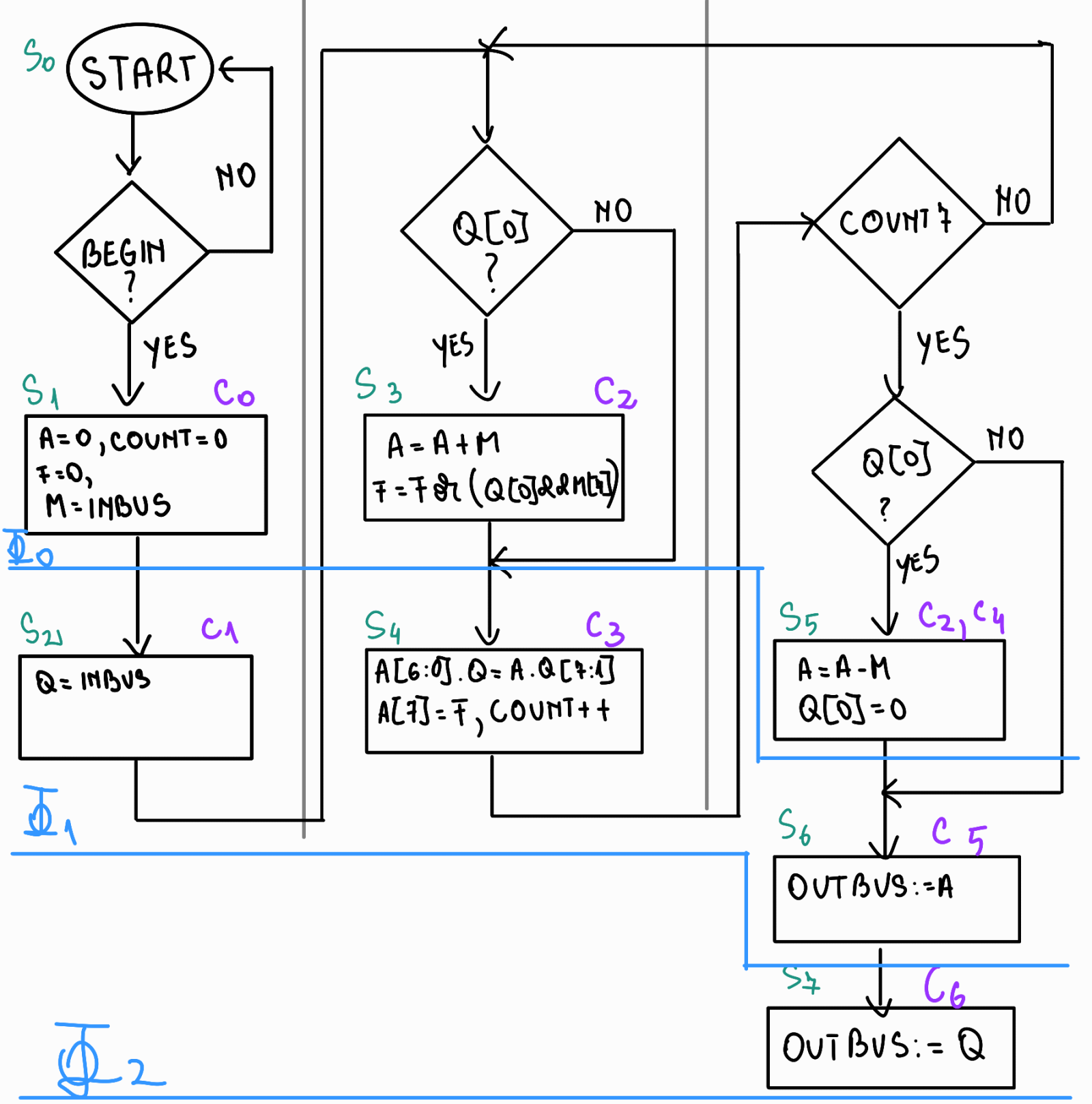

Stare	B7	B6	B5	B4	B3	B2	B1	B0
S_0	0	0	0	0	0	0	0	1
S_1	0	0	0	0	0	0	1	0
S_2	0	0	0	0	0	1	0	0
S_3	0	0	0	0	1	0	0	0
S_4	0	0	0	1	0	0	0	0
S_5	0	0	1	0	0	0	0	0
S_6	0	1	0	0	0	0	0	0
S_7	1	0	0	0	0	0	0	0

Ecuatii de feedback

$B_0' = B_0 \cdot \overline{BEGIN}$ sau B_7

$B_1 = B_0 \cdot BEGIN$

$B_2 = B_1$

$B_3 = B_2 \cdot Q[0]$ sau $B_4 \cdot \overline{count7} \cdot Q[0]$ sau $B_4 \cdot count7 \cdot Q[0]$

$B_4 = B_2 \cdot \overline{Q[0]}$ sau B_3 sau $B_4 \cdot \overline{count7} \cdot \overline{Q[0]}$

$B_5 = B_4 \cdot count7 \cdot Q[0]$

$B_6 = B_5$ sau $B_4 \cdot count7 \cdot \overline{Q[0]}$

$B_7 = B_6$

Ecuatii de iesire

$C_0 = B_1$

$C_1 = B_2$

$C_2 = B_3$ sau B_5

$C_3 = B_4$

$C_4 = B_5$

$C_5 = B_6$

$C_6 = B_7$

$EMB = B_0$

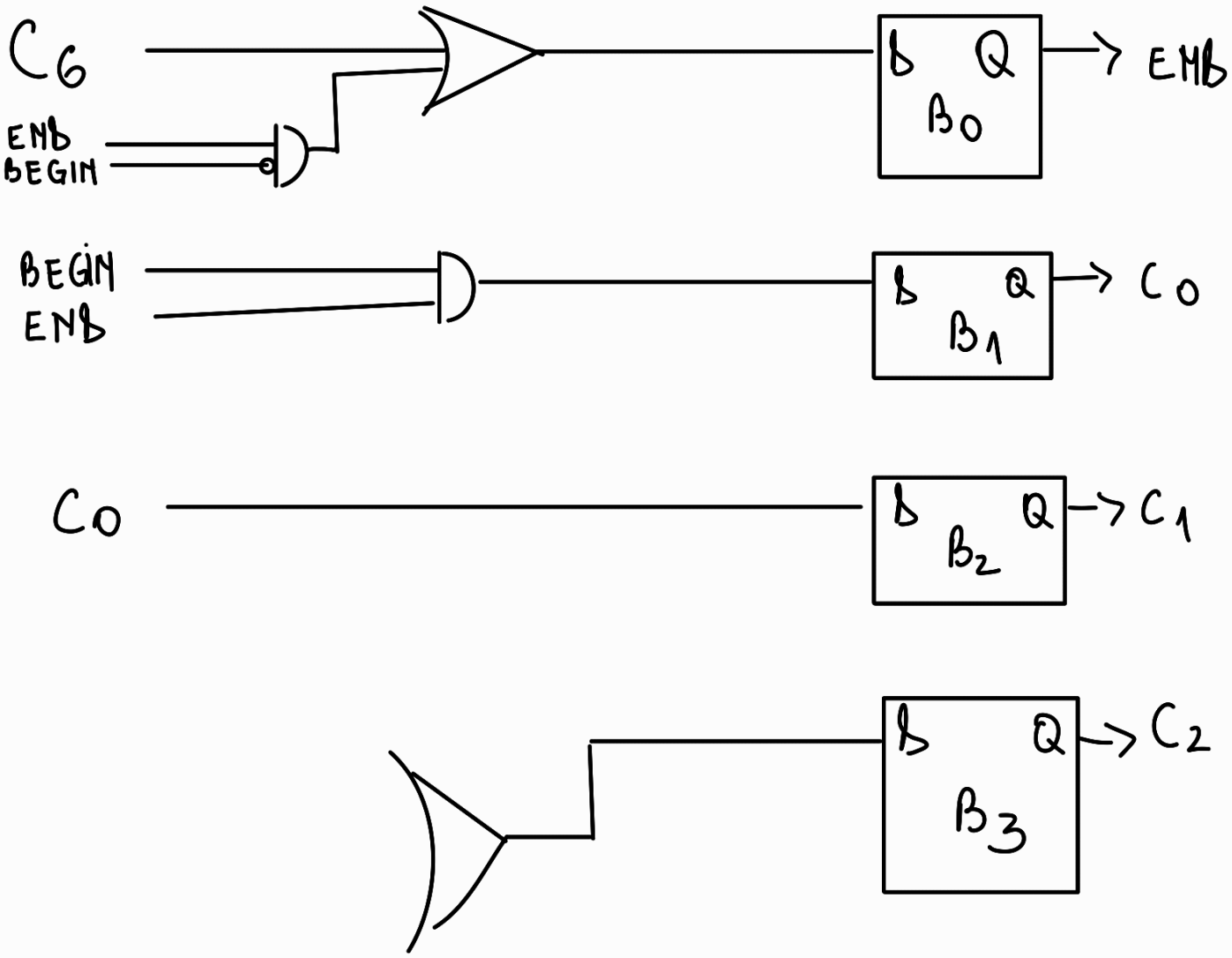
C6
ENB
BEGIN
b
Q
B0
ENB
BEGIN
ENB
b
Q
B1
C0
C0
b
Q
B2
C1
b
Q
B3
C2

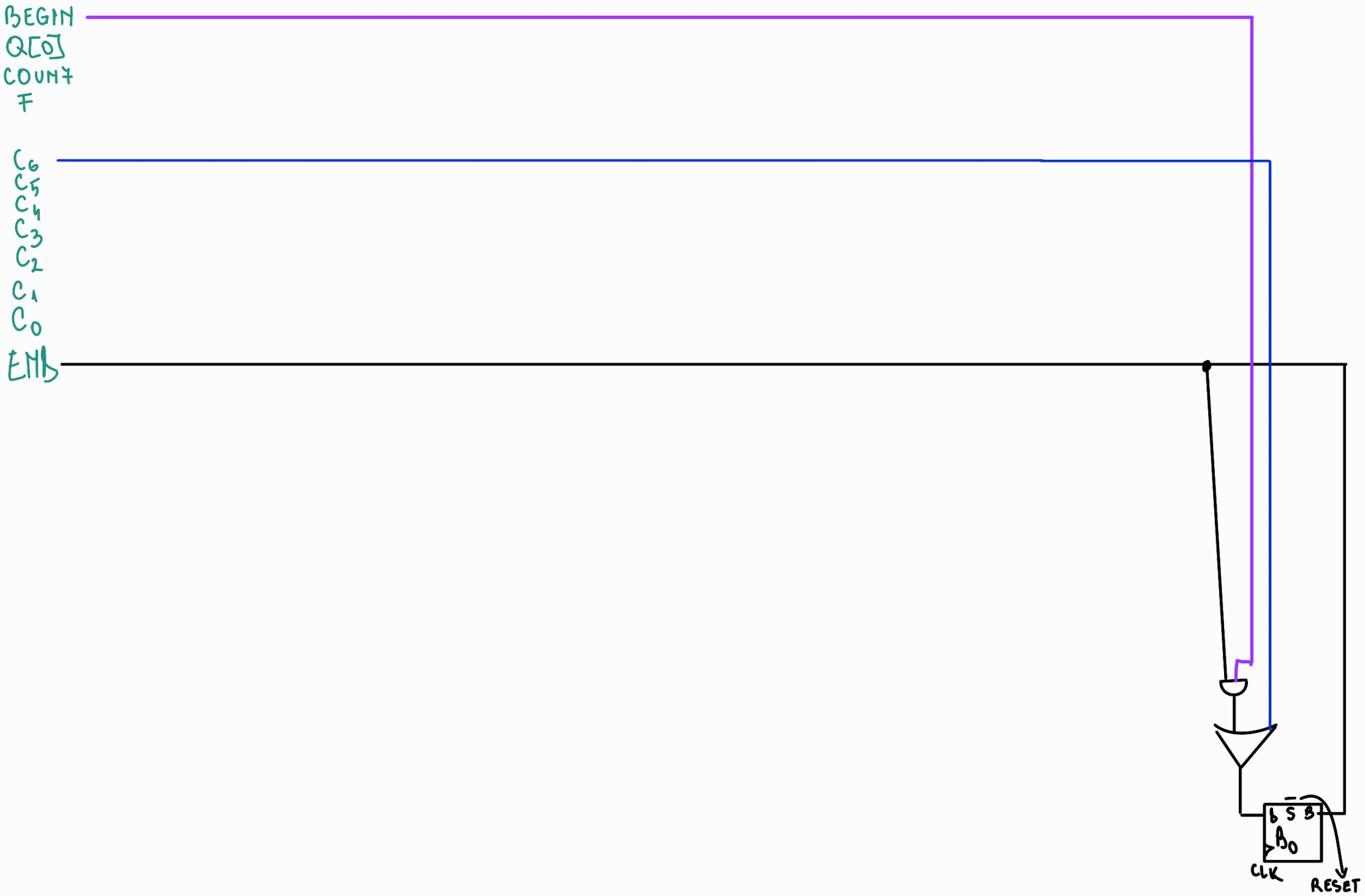
BEGIN
Q[0]
COUNT
F
C6
C5
C4
C3
C2
C1
C0
EMB
CLK
RESET

Metoda Sequence Counter